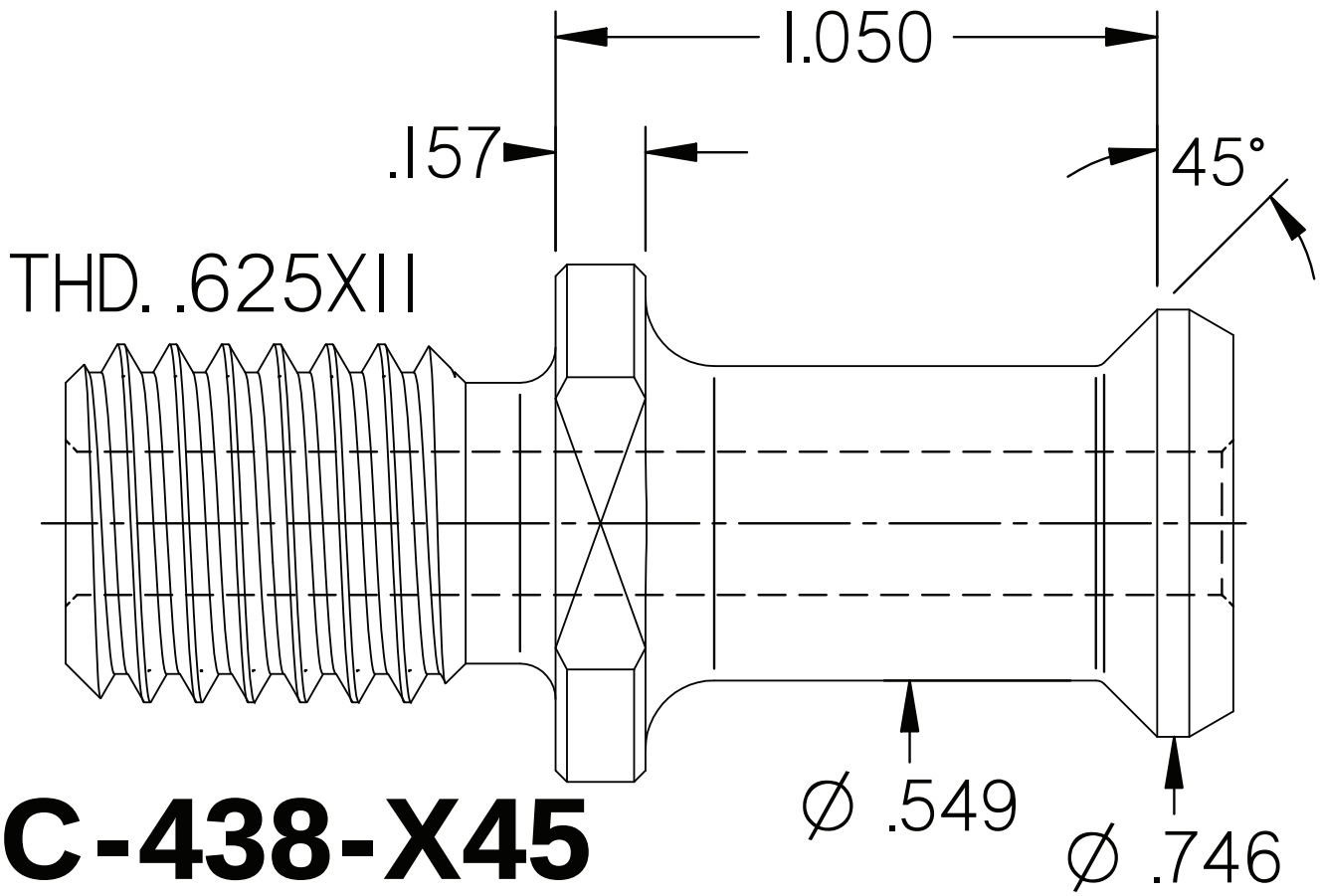

PSC-438-X45